AIRBEST

SH Series –Suction Cup With Level Compensator

Heavy Load Flat Suction Cup

HEAVY LOAD | WOOD

How to order

SH40N – E 25 LR1 – M18

① ② ③ ④ ⑤

① Model	② Buffer type	③ Buffer stroke
SH40N	**E** – External spring	**25** **75** **50** **100**
④ Vacuum port direction		**⑤ Mounting thread**
Nil – Vertical,Rc1/8 Female thread **LR1** – Lateral,Rc1/8 Female thread		**M18** – M18x1.5 **M22** – M22x1.5

◇Note: Please refer to the page 185 for suction cup selection.

Selection

Model	Buffer stroke				Mounting thread	
	25	50	75	100	M18	M22
SH40 – 80	●	●	●	–	●	–
SH100 – 125	●	●	●	●	–	●

◇Note :"●"-default, in stock: "–"unavailable.

Dimensions (mm)

Vertical direction connection

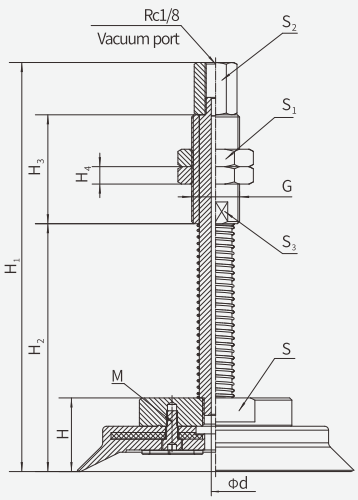

Model/Size	H	H_1	H_2	H_3	H_4	d	G	M	S	S_1	S_2	S_3
SH40–E25–M18	23	118.5	63	35	6	3	M18×1.5	3–M3	24	27	14	16
SH40–E50–M18	23	153.5	98	35	6	3	M18×1.5	3–M3	24	27	14	16
SH40–E75–M18	23	189.5	134	35	6	3	M18×1.5	3–M3	24	27	14	16
SH50–E25–M18	23	118.5	63	35	6	3	M18×1.5	3–M3	24	27	14	16
SH50–E50–M18	23	153.5	98	35	6	3	M18×1.5	3–M3	24	27	14	16
SH50–E75–M18	23	189.5	134	35	6	3	M18×1.5	3–M3	24	27	14	16
SH63–E25–M18	26	121.5	66	35	6	3	M18×1.5	4–M4	37	27	14	16
SH63–E50–M18	26	156.5	101	35	6	3	M18×1.5	4–M4	37	27	14	16
SH63–E75–M18	26	192.5	137	35	6	3	M18×1.5	4–M4	37	27	14	16
SH80–E25–M18	28	123.5	68	35	6	3	M18×1.5	4–M4	37	27	14	16
SH80–E50–M18	28	158.5	103	35	6	3	M18×1.5	4–M4	37	27	14	16
SH80–E75–M18	28	194.5	139	35	6	3	M18×1.5	4–M4	37	27	14	16
SH100–E25–M22	34	152	78	50	8	4	M22×1.5	4–M5	60	30	17	19
SH100–E50–M22	34	188	114	50	8	4	M22×1.5	4–M5	60	30	17	19
SH100–E75–M22	34	228	154	50	8	4	M22×1.5	4–M5	60	30	17	19
SH100–E100–M22	34	263	189	50	8	4	M22×1.5	4–M5	60	30	17	19
SH125–E25–M22	34	152	78	50	8	4	M22×1.5	4–M5	60	30	17	19
SH125–E50–M22	34	188	114	50	8	4	M22×1.5	4–M5	60	30	17	19
SH125–E75–M22	34	228	154	50	8	4	M22×1.5	4–M5	60	30	17	19
SH125–E100–M22	34	263	189	50	8	4	M22×1.5	4–M5	60	30	17	19

SH Series –Suction Cup With Level Compensator

Heavy Load Flat Suction Cup

Dimensions(mm)

Lateral direction connection

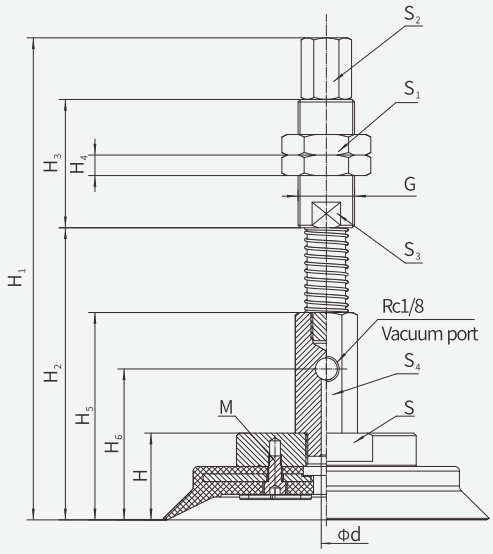

Model/Size	H	H_1	H_2	H_3	H_4	H_5	H_6	d	G	M	S	S_1	S_2	S_3	S_4
SH40-E25LR1-M18	23	151	100	35	6	60	38	3	M18×1.5	3-M3	24	27	14	16	21
SH40-E50LR1-M18	23	186	135	35	6	60	38	3	M18×1.5	3-M3	24	27	14	16	21
SH40-E75LR1-M18	23	222	171	35	6	60	38	3	M18×1.5	3-M3	24	27	14	16	21
SH50-E25LR1-M18	23	151	100	35	6	60	38	3	M18×1.5	3-M3	24	27	14	16	21
SH50-E50LR1-M18	23	186	135	35	6	60	38	3	M18×1.5	3-M3	24	27	14	16	21
SH50-E75LR1-M18	23	222	171	35	6	60	38	3	M18×1.5	3-M3	24	27	14	16	21
SH63-E25LR1-M18	26	154	103	35	6	63	41	3	M18×1.5	4-M4	37	27	14	16	21
SH63-E50LR1-M18	26	189	136	35	6	63	41	3	M18×1.5	4-M4	37	27	14	16	21
SH63-E75LR1-M18	26	225	172	35	6	63	41	3	M18×1.5	4-M4	37	27	14	16	21
SH80-E25LR1-M18	28	156	105	35	6	63	41	3	M18×1.5	4-M4	37	27	14	16	21
SH80-E50LR1-M18	28	191	138	35	6	63	41	3	M18×1.5	4-M4	37	27	14	16	21
SH80-E75LR1-M18	28	227	174	35	6	63	41	3	M18×1.5	4-M4	37	27	14	16	21
SH100-E25LR1-M22	34	186	115	50	8	71	49	4	M22×1.5	4-M5	60	30	17	19	21
SH100-E50LR1-M22	34	222	151	50	8	71	49	4	M22×1.5	4-M5	60	30	17	19	21
SH100-E75LR1-M22	34	262	191	50	8	71	49	4	M22×1.5	4-M5	60	30	17	19	21
SH100-E100LR1-M22	34	297	226	50	8	71	49	4	M22×1.5	4-M5	60	30	17	19	21
SH125-E25LR1-M22	34	186	115	50	8	71	49	4	M22×1.5	4-M5	60	30	17	19	21
SH125-E50LR1-M22	34	222	151	50	8	71	49	4	M22×1.5	4-M5	60	30	17	19	21
SH125-E75LR1-M22	34	262	191	50	8	71	49	4	M22×1.5	4-M5	60	30	17	19	21
SH125-E100LR1-M22	34	297	226	50	8	71	49	4	M22×1.5	4-M5	60	30	17	19	21